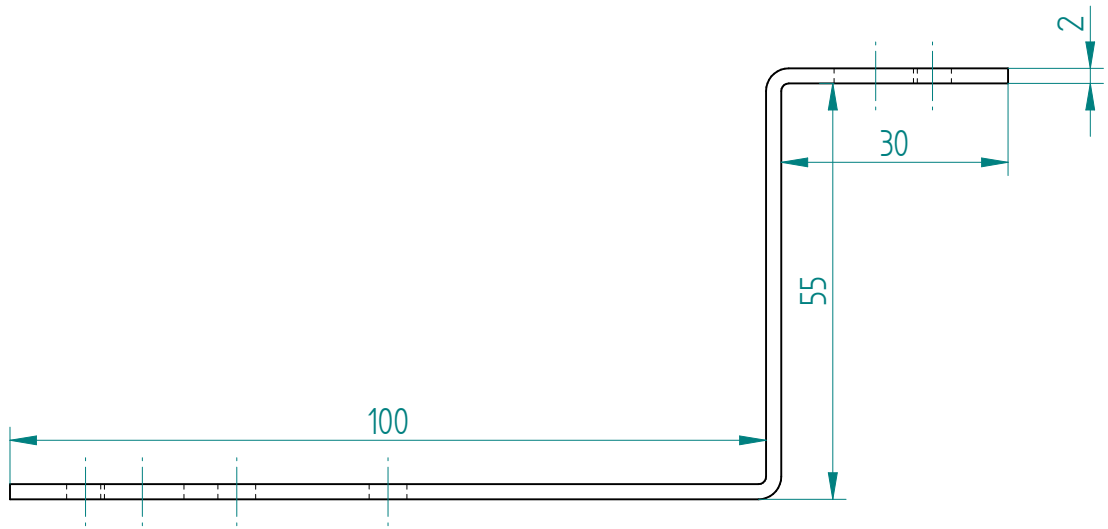

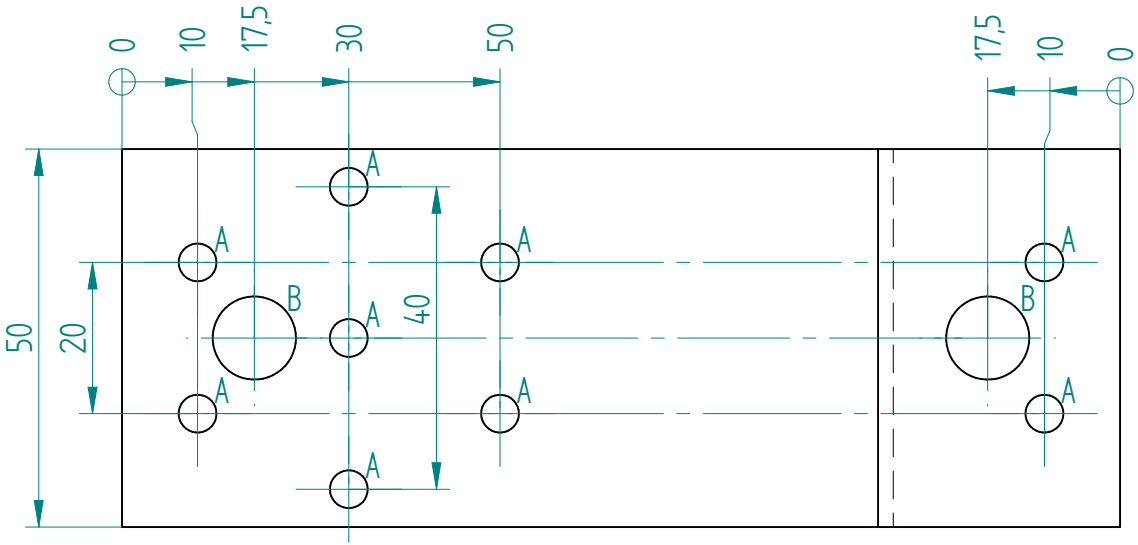

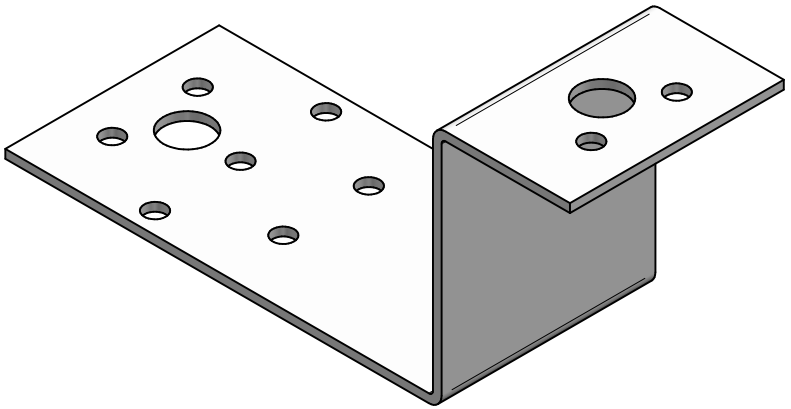

3.2

Hole	Size	Count
A	5 mm	9
B	11 mm	2

Product name: Angle bracket 100x55x30x50x2,0

Material: HDG DX51D Z275